# N-Ch 60V Fast Switching MOSFETs

- ★ 100% EAS Guaranteed
- ★ Green Device Available
- ★ Super Low Gate Charge
- ★ Excellent CdV/dt effect decline
- ★ Advanced high cell density Trench technology

## Product Summary

Green

| BVDSS | RDSON | ID |
|---|---|---|
| 60V | 4.8mΩ | 90A |

## Description

The XR90N06 is the high cell density trenched N-ch MOSFETs, which provide excellent RDSON and gate charge for most of the synchronous buck converter applications.
The XR90N06 meet the RoHS and Green Product requirement 100% EAS guaranteed with full function reliability approved.

## TO252-3L Pin Configuration

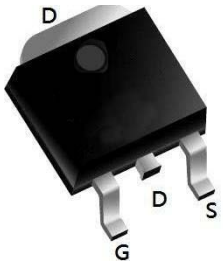


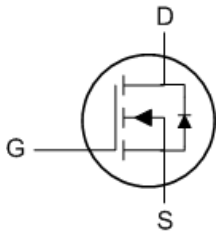


## Absolute Maximum Ratings

| Symbol | Parameter | Rating | Units |
|---|---|---|---|
| $V_{DS}$ | Drain-Source Voltage | 60 | V |
| $V_{GS}$ | Gate-Source Voltage | ±20 | V |
| $I_D$@$T_C$=25˚C | Continuous Drain Current, $V_{GS}$ @ 10V[1,6] | 90 | A |
| $I_D$@$T_C$=100˚C | Continuous Drain Current, $V_{GS}$ @ 10V[1,6] | 63 | A |
| $I_{DM}$ | Pulsed Drain Current[2] | 360 | A |
| EAS | Single Pulse Avalanche Energy[3] | 400 | mJ |
| $I_{AS}$ | Avalanche Current | --- | A |
| $P_D$@$T_C$=25˚C | Total Power Dissipation[4] | 88 | W |
| $T_{STG}$ | Storage Temperature Range | -55 to 150 | ˚C |
| $T_J$ | Operating Junction Temperature Range | -55 to 150 | ˚C |

## Thermal Data

| Symbol | Parameter | Typ. | Max. | Unit |
|---|---|---|---|---|
| $R_{\theta JA}$ | Thermal Resistance Junction-Ambient [1] | --- | --- | ˚C/W |
| $R_{\theta JC}$ | Thermal Resistance Junction-Case[1] | --- | 1.7 | ˚C/W |

## Electrical Characteristics ($T_J$=25 ℃, unless otherwise noted)

| Symbol | Parameter | Conditions | Min. | Typ. | Max. | Unit |
|---|---|---|---|---|---|---|
| $BV_{DSS}$ | Drain-Source Breakdown Voltage | $V_{GS}$=0V , $I_D$=250uA | 60 | --- | --- | V |
| $\triangle BV_{DSS}/\triangle T_J$ | $BV_{DSS}$ Temperature Coefficient | Reference to 25℃ , $I_D$=1mA | --- | --- | --- | V/℃ |
| $R_{DS(ON)}$ | Static Drain-Source On-Resistance[2] | $V_{GS}$=10V , $I_D$=23A | --- | 4.8 | 6.2 | mΩ |
| | | $V_{GS}$=4.5V , $I_D$=17A | --- | --- | --- | |
| $V_{GS(th)}$ | Gate Threshold Voltage | $V_{GS}$=$V_{DS}$ , $I_D$ =-250uA | 2 | --- | 4 | V |
| $\triangle V_{GS(th)}$ | $V_{GS(th)}$ Temperature Coefficient | | --- | --- | --- | mV/℃ |
| $I_{DSS}$ | Drain-Source Leakage Current | $V_{DS}$=60V , $V_{GS}$=0V , $T_J$=25℃ | --- | --- | 1 | uA |
| | | $V_{DS}$=60V, $V_{GS}$=0V , $T_J$=125℃ | --- | --- | 100 | |
| $I_{GSS}$ | Gate-Source Leakage Current | $V_{GS}$=±20V , $V_{DS}$=0V | --- | --- | ±100 | nA |
| gfs | Forward Transconductance | $V_{DS}$=10V , $I_D$=23A | --- | 36.5 | --- | S |
| $R_g$ | Gate Resistance | $V_{DS}$=0V , $V_{GS}$=0V , f=1MHz | --- | 0.86 | --- | Ω |
| $Q_g$ | Total Gate Charge | $V_{DS}$=30V , $V_{GS}$=10V , $I_D$=23A | --- | 76 | --- | nC |
| $Q_{gs}$ | Gate-Source Charge | | --- | 21 | --- | |
| $Q_{gd}$ | Gate-Drain Charge | | --- | 24 | --- | |
| $T_{d(on)}$ | Turn-On Delay Time | VGS=10V, VDS=30V, RL= 1.5Ω , $R_{GEN}$=3Ω | --- | 20 | --- | ns |
| $T_r$ | Rise Time | | --- | 90 | --- | |
| $T_{d(off)}$ | Turn-Off Delay Time | | --- | 37 | --- | |
| $T_f$ | Fall Time | | --- | 85 | --- | |
| $C_{iss}$ | Input Capacitance | $V_{DS}$=30V , $V_{GS}$=0V , f=1MHz | --- | 4762 | --- | pF |
| $C_{oss}$ | Output Capacitance | | --- | 265 | --- | |
| $C_{rss}$ | Reverse Transfer Capacitance | | --- | 230 | --- | |

## Diode Characteristics

| Symbol | Parameter | Conditions | Min. | Typ. | Max. | Unit |
|---|---|---|---|---|---|---|
| $I_S$ | Continuous Source Current[1,4] | $V_G$=$V_D$=0V , Force Current | --- | --- | 90 | A |
| $V_{SD}$ | Diode Forward Voltage[2] | $V_{GS}$=0V , $I_S$=23A , $T_J$=25C | --- | --- | 1.2 | V |
| $t_{rr}$ | Reverse Recovery Time | IF=23A , di/dt=100A/μs , $T_J$=25C | --- | 25 | --- | nS |
| $Q_{rr}$ | Reverse Recovery Charge | | --- | 30 | --- | nC |

Note :

1.Repetitive Rating: Pulse width limited by maximum junction temperature.
2.$E_{AS}$ condition: $T_J$=25℃,$V_{DD}$=40V,$V_G$=10V, Rg=25Ω, L=0.5mH.
3.Repetitive Rating: Pulse width limited by maximum junction temperature.

## Typical Electrical And Thermal Characteristics (Curves)

**Figure 1. Output Characteristics**

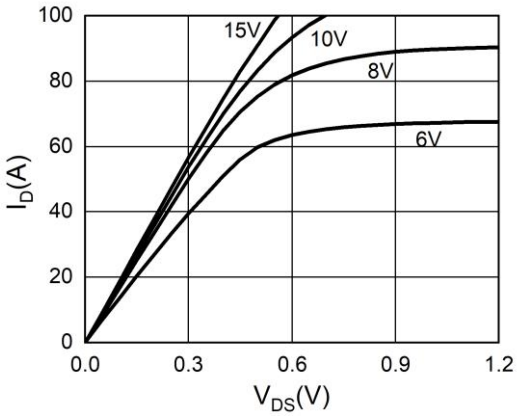


**Figure 2. Transfer Characteristics**

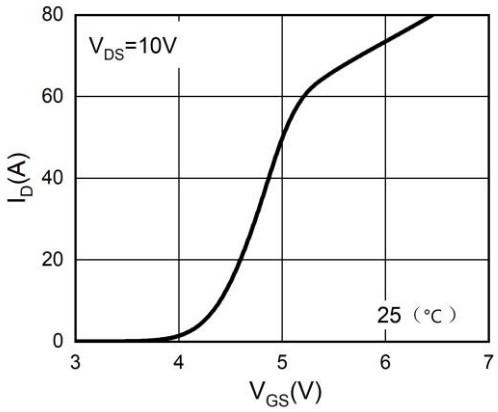


**Figure 3. Power Dissipation**

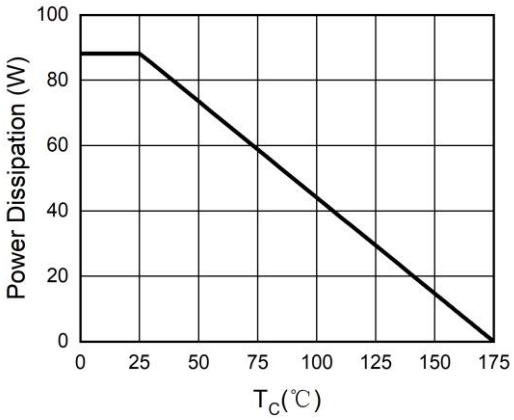


**Figure 4. Drain Current**

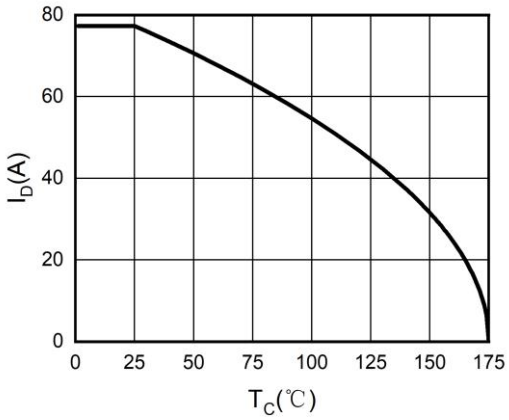


**Figure 5. $BV_{DSS}$ vs Junction Temperature**

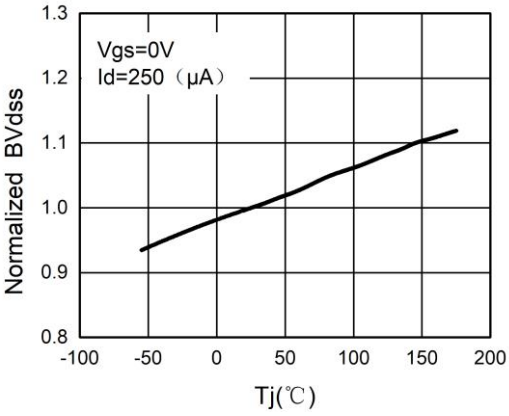


**Figure 6. $R_{DS(ON)}$ vs Junction Temperature**

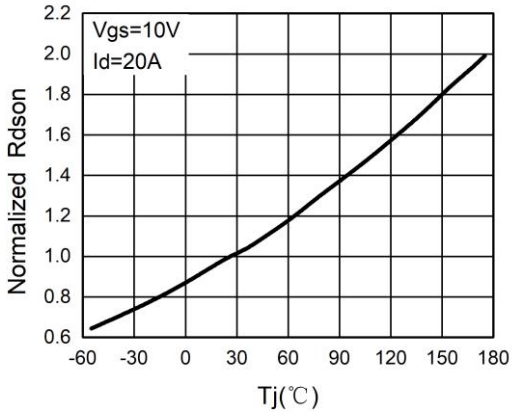

## Typical Electrical And Thermal Characteristics (Curves)

**Figure 7. Gate Charge Waveforms**

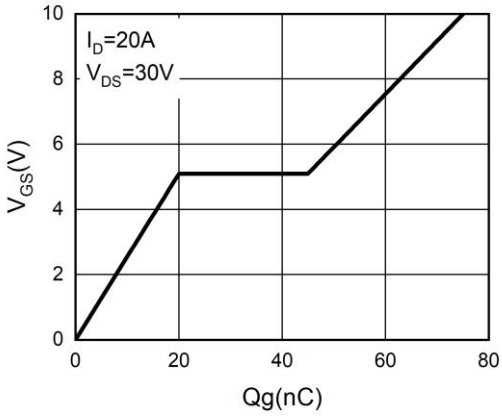


**Figure 8. Capacitance**

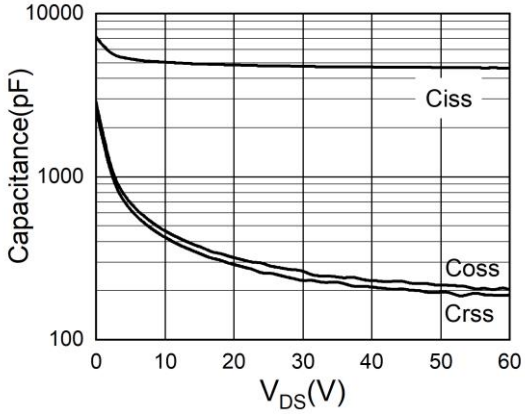


**Figure 9. Body-Diode Characteristics**

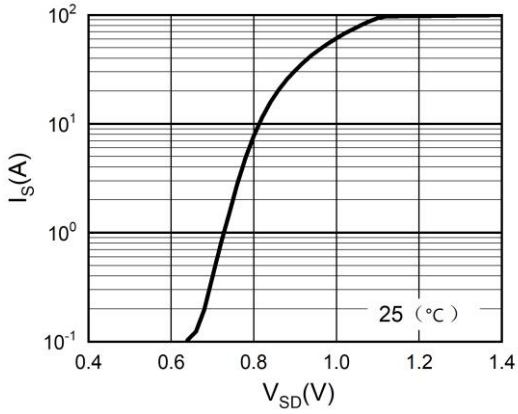


**Figure 10. Maximum Safe Operating Area**

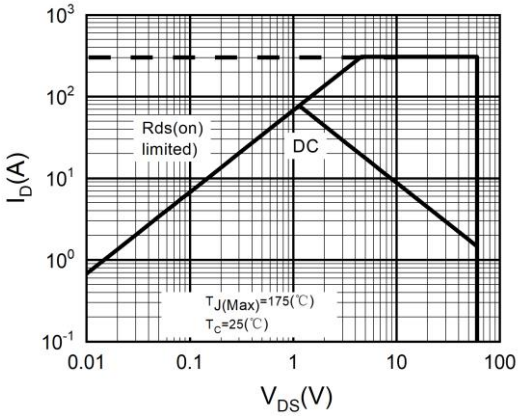

## ■ Test Circuits & Waveforms

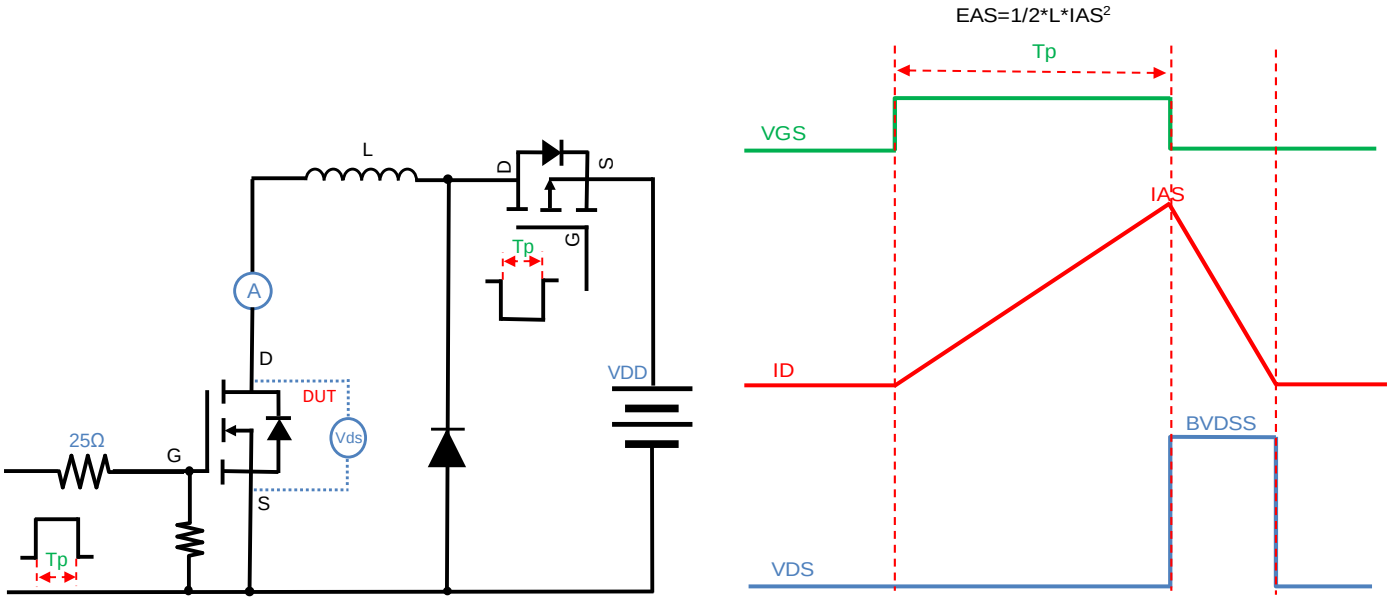


Figure A. Unclamped Inductive Switching (UIS) Test Circuit & Waveform

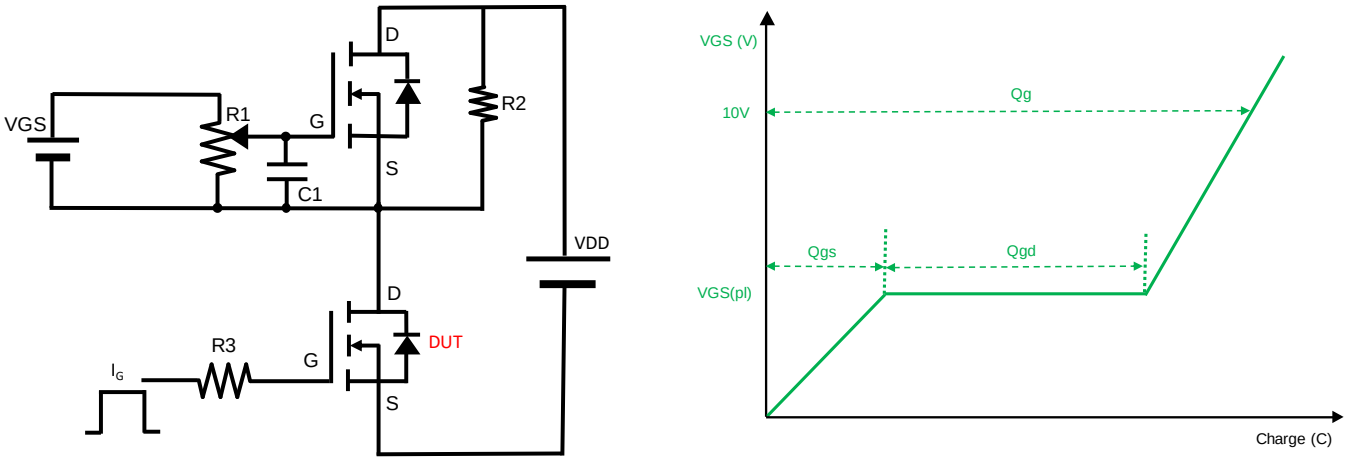


Figure B. Gate Charge Test Circuit & Waveform

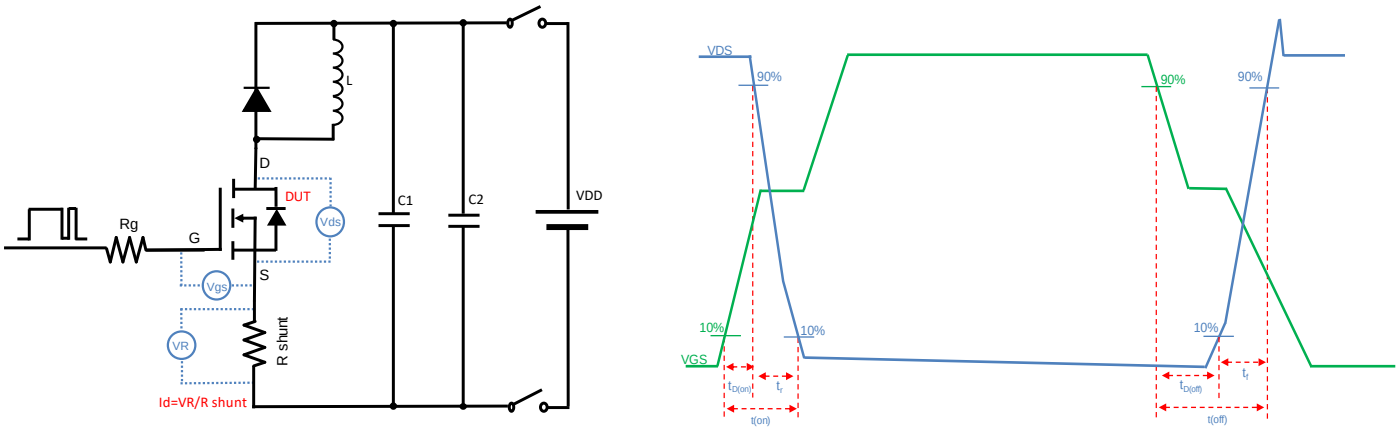


Figure C. Resistive Switching Test Circuit & Waveform

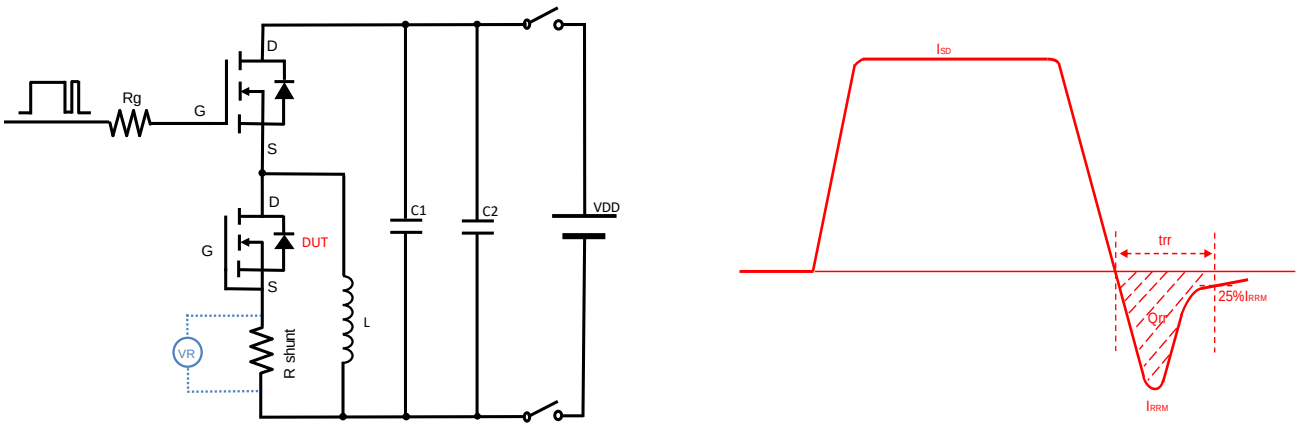


Figure D. Diode Recovery Test Circuit & Waveform

## Package Mechanical Data-TO252-3L

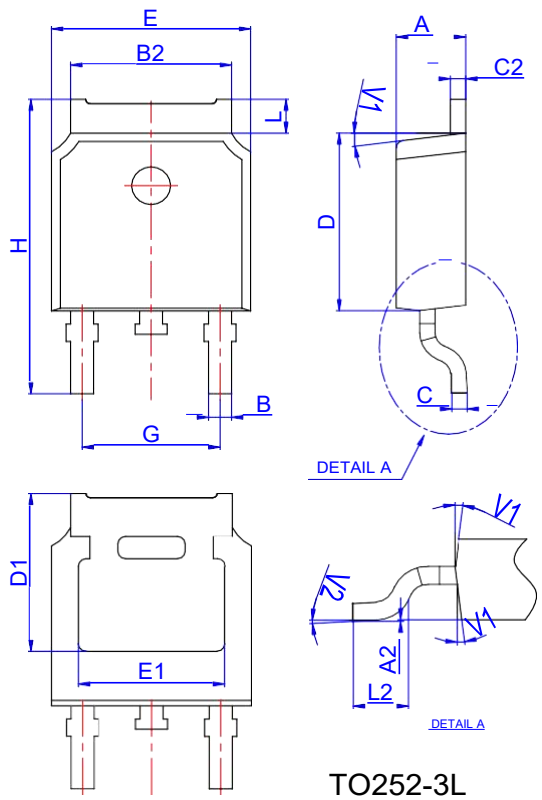


TO252-3L

| Ref. | Dimensions | | | | | |
|---|---|---|---|---|---|---|
| | Millimeters | | | Inches | | |
| | Min. | Typ. | Max. | Min. | Typ. | Max. |
| A | 2.10 | | 2.50 | 0.083 | | 0.098 |
| A2 | 0 | | 0.10 | 0 | | 0.004 |
| B | 0.66 | | 0.86 | 0.026 | | 0.034 |
| B2 | 5.18 | | 5.48 | 0.202 | | 0.216 |
| C | 0.40 | | 0.60 | 0.016 | | 0.024 |
| C2 | 0.44 | | 0.58 | 0.017 | | 0.023 |
| D | 5.90 | | 6.30 | 0.232 | | 0.248 |
| D1 | 5.30REF | | | 0.209REF | | |
| E | 6.40 | | 6.80 | 0.252 | | 0.268 |
| E1 | 4.63 | | | 0.182 | | |
| G | 4.47 | | 4.67 | 0.176 | | 0.184 |
| H | 9.50 | | 10.70 | 0.374 | | 0.421 |
| L | 1.09 | | 1.21 | 0.043 | | 0.048 |
| L2 | 1.35 | | 1.65 | 0.053 | | 0.065 |
| V1 | | 7° | | | 7° | |
| V2 | 0° | | 6° | 0° | | 6° |

## Reel Spectification-TO252-3L

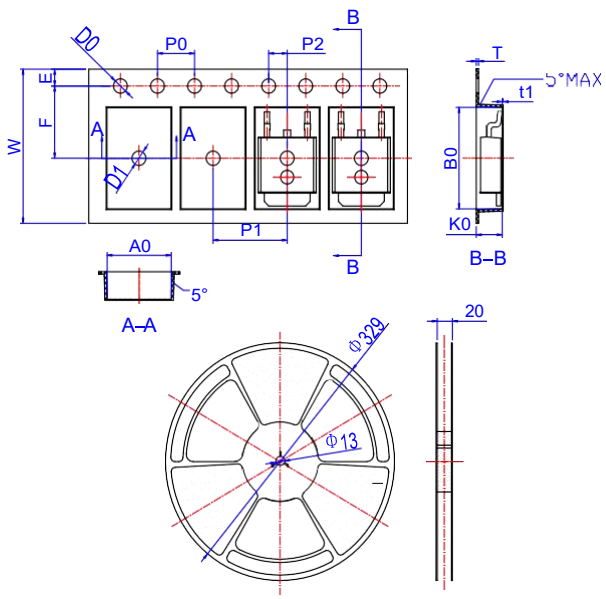


| Ref. | Dimensions | | | | | |
|---|---|---|---|---|---|---|
| | Millimeters | | | Inches | | |
| | Min. | Typ. | Max. | Min. | Typ. | Max. |
| W | 15.90 | 16.00 | 16.10 | 0.626 | 0.630 | 0.634 |
| E | 1.65 | 1.75 | 1.85 | 0.065 | 0.069 | 0.073 |
| F | 7.40 | 7.50 | 7.60 | 0.291 | 0.295 | 0.299 |
| D0 | 1.40 | 1.50 | 1.60 | 0.055 | 0.059 | 0.063 |
| D1 | 1.40 | 1.50 | 1.60 | 0.055 | 0.059 | 0.063 |
| P0 | 3.90 | 4.00 | 4.10 | 0.154 | 0.157 | 0.161 |
| P1 | 7.90 | 8.00 | 8.10 | 0.311 | 0.315 | 0.319 |
| P2 | 1.90 | 2.00 | 2.10 | 0.075 | 0.079 | 0.083 |
| A0 | 6.85 | 6.90 | 7.00 | 0.270 | 0.271 | 0.276 |
| B0 | 10.45 | 10.50 | 10.60 | 0.411 | 0.413 | 0.417 |
| K0 | 2.68 | 2.78 | 2.88 | 0.105 | 0.109 | 0.113 |
| T | 0.24 | | 0.27 | 0.009 | | 0.011 |
| t1 | 0.10 | | | 0.004 | | |
| 10P0 | 39.80 | 40.00 | 40.20 | 1.567 | 1.575 | 1.583 |